High Power Polarization Maintaining Filter Wavelength Division Multiplexers 3155nm~5551nm

Features

Low Insertion Loss
High Return Loss
High Isolation
High Power Handling Capability

Applications

Fiber Optic Instruments
Raman Amplifiers
EDFAs
Fiber Sensors

Specifications

Parameters		Unit	Values		
Pass Band	Wavelength Range	nm	1270-1350(1530-1600)	1450-1490(1530-1600)	1500-1520(1530-1570)
	Typ. Insertion Loss	dB	0.6	0.6	0.7
	Max. Insertion Loss	dB	0.8	0.8	0.9
	Typ. Isolation	dB	30	30	30
	Min. Isolation	dB	25	25	25
Reflection Band	Wavelength Range	nm	1530-1600(1270-1350)	1530-1600(1450-1490)	1530-1570(1500-1520)
	Typ. Insertion Loss	dB	0.5		
	Max. Insertion Loss	dB	0.7		
	Typ. Isolation	dB	15		
	Min. Isolation	dB	12		
Min. Extinction Ratio		dB	20		
Min. Return Loss		dB	50		
Thermal Stability		dB/	≤ 0.005		
Max. Optical Power (CW)		W	1, 2, 3 or Specify		
Max. Peak Power for ns Pulse		kW	10		
Max. Tensile Load		N	5		
Fiber Type			PM Panda Fiber		
Operating Temperature			-5 to +70		
Storage Temperature			-40 to +85		

*Above specifications are for device without connector.

*For devices with connectors, IL will be 0.3dB higher, RL will be 5dB lower , ER will be 2dB lower and optical power is only 1000mW(CW).

*The PM fiber and the key are aligned to the slow axis.

Package Dimensions

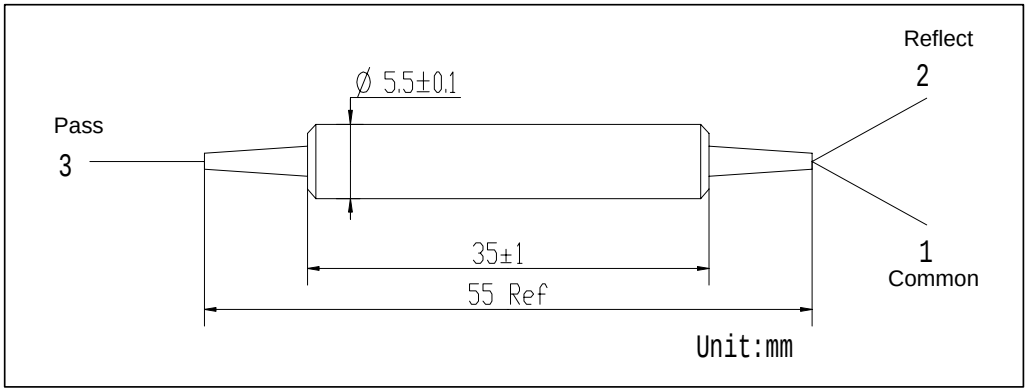

Ordering Information

HPMFWDM- - - - -

: Wavelength
3155 - 1310nm Pass / 1550nm Reflect
5531 - 1550nm Pass / 1310nm Reflect
4855 - 1480nm Pass / 1550nm Reflect
5548 - 1550nm Pass / 1480nm Reflect
5155 - 1510nm Pass / 1550nm Reflect
5551 - 1550nm Pass / 1510nm Reflect

: Connector Type on Port 1, 2 & 3
1 - FC/UPC
2 - FC/APC
3 - SC/UPC
4 - SC/APC
N - None
S - Specify

: Fiber Jacket on Port 1, 2 & 3
B - 250um Fiber
L - 900um Loose Tube
S - Specify

: Fiber Length
0.8 - 0.8m
S - Specify

: Handling Power
01 - 1W
SS - Specify