High Power Polarization Maintaining Filter Wavelength Division Multiplexer 9806nm-9803nm

Features

Wide Pass Band
Low Insertion Loss
High Return Loss
Excellent Environmental Stability
High Power Handling Capability

Applications

Fiber Lasers
Fiber Amplifiers
Fiber Sensors
Research

Specifications

Parameters		Unit	Values
Pass Band	Wavelength Range	nm	960~990 (1020~1080)
	Max. Insertion Loss	dB	0.9
	Typ. Insertion Loss	dB	0.7
	Min. Isolation	dB	25
	Typ. Isolation	dB	30
Reflection Band	Wavelength Range	nm	1020~1080 (960~990)
	Max. Insertion Loss	dB	0.7
	Typ. Insertion Loss	dB	0.5
	Min. Isolation	dB	12
	Typ. Isolation	dB	15
Min. Return Loss		dB	50
Min. Extinction Ratio		dB	20
Typ. Extinction Ratio		dB	22
Min. Directivity (over Reflection Band)		dB	55
Thermal Stability		dB/	≤0.005
Max. Optical Power (CW)		W	1, 2, 3 or Specify
Max. Peak Power for ns Pulse		kW	10
Max. Tensile Load		N	5
Fiber Type			PM 980 Panda Fiber
Operating Temperature			-5 to +70
Storage Temperature			-40 to +85

*Above specifications are for device without connector.

*For devices with connectors, IL will be 0.3dB higher, RL will be 5dB lower , ER will be 2dB lower and optical power is only 1000mW(CW).

*The PM fiber and the connector key are aligned to the slow axis.

Package Dimensions

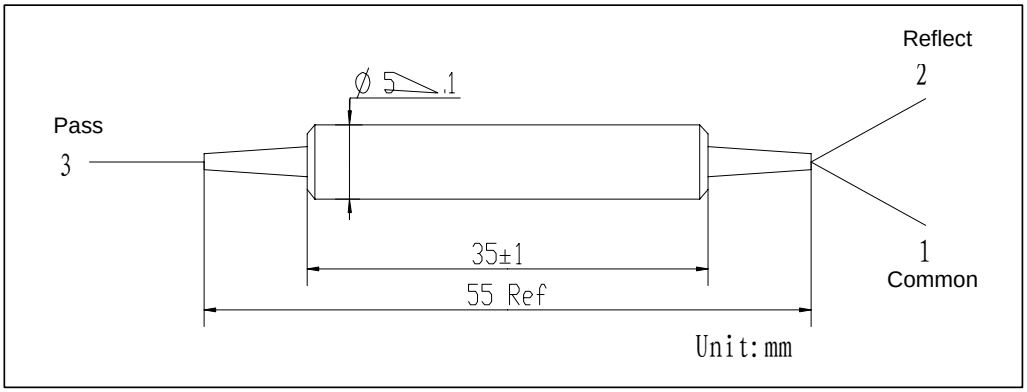

Ordering Information

HPMFWDM- - - - -

: Wavelength
9806 - 980nm Pass / 1064nm Reflect
0698 - 1064nm Pass / 980nm Reflect

: Handling Power
01 - 1W
SS - Specify

: Connector Type on Port 1, 2 & 3
1 - FC/UPC
2 - FC/APC
3 - SC/UPC
4 - SC/APC
N - None
S - Specify

: Fiber Jacket on Port 1, 2 & 3
B - 250um Fiber
L - 900um Loose Tube
S - Specify

: Fiber Length
0.8 - 0.8m
S - Specify